.4098

BILL NO. S-78-06-20

SPECIAL ORDINANCE NO. S-102-78

AN ORDINANCE approving City Utilities Purchase Order No. 0060 with Westinghouse Electric Corporation for a Coordination Study for General Superintendent of City Utilities.

BE IT ORDAINED BY THE COMMON COUNCIL OF THE CITY OF FORT WAYNE, INDIANA:

SECTION 1. That City Utilities Purchase Order No. 0060, dated June 2, 1978, between the City of Fort Wayne, by and through the City Utilities Purchasing Agent and the Board of Public Works and Westinghouse Electric Corporation, for a Coordination Study to analyze the electrical system to make sure the relays are all set properly in order to allow the Plant to run efficiently, designated study to be done on WPC Plant, at a cost of $8,050.00, all as more particularly set forth in said Purchase Order, which is on file in the Office of the Department of Purchasing and is by reference incorporated herein and made a part hereof, be and the same is in all things ratified, confirmed and approved.

SECTION 2. That this Ordinance shall be in full force and effect from and after its passage and approval by the Mayor.

Councilman

APPROVED AS TO FORM
AND LEGALITY,

CITY ATTORNEY

Read the first time in full and on motion by Burns, seconded by Moses, and duly adopted, read the second time by title and referred to the Committee on City Utilities (and the City Plan Commission for recommendation) and Public Hearing to be held after due legal notice, at the Council Chambers, City-County Building, Fort Wayne, Indiana, on _____, the _____ day of _____, 19__ at _____ o'clock ____ M.,E.S.T.

DATE: 6-13-78

Charles W. Westerman
CITY CLERK

Read the third time in full and on motion by Burns, seconded by Hinga, and duly adopted, placed on its passage.

PASSED (~~LOST~~) by the following vote:

	AYES	NAYS	ABSTAINED	ABSENT	TO-WIT:
TOTAL VOTES	9				
BURNS	X				
HINGA	X				
HUNTER	X				
MOSES	X				
NUCKOLS	X				
SCHMIDT, D.	X				
SCHMIDT, V.	X				
STIER	X				
TALARICO	X				

DATE: 6-27-78

Charles W. Westerman
CITY CLERK

Passed and adopted by the Common Council of the City of Fort Wayne, Indiana, as (~~ZONING MAP~~) (~~GENERAL~~) (~~ANNEXATION~~) (SPECIAL) (~~APPROPRIATION~~) ORDINANCE (RESOLUTION) No. S-102-78 on the 27th day of June, 19 78

ATTEST: (SEAL)

Charles W. Westerman
CITY CLERK

Samuel J. Talarico
PRESIDING OFFICER

Presented by me to the Mayor of the City of Fort Wayne, Indiana, on the 28th day of June, 19 78, at the hour of 11:09 o'clock A M.,E.S.T.

Charles W. Westerman
CITY CLERK

Approved and signed by me this 29 day of June, 19 78, at the hour of 8:30 o'clock P M.,E.S.T.

Robert E. Armstrong
MAYOR

Bill No. S-78-06-20

REPORT OF THE COMMITTEE ON CITY UTILITIES

We, your Committee on City Utilities to whom was referred an Ordinance approving City Utilities Purchase Order No. 0060 with Westinghouse Electric Corporation for a Coordination Study for General Superintendent of City Utilities

have had said Ordinance under consideration and beg leave to report back to the Common Council that said Ordinance DO PASS.

PAUL M. BURNS - CHAIRMAN

JAMES S. STIER - VICE CHAIRMAN

VIVIAN G. SCHMIDT

WINFIELD C. MOSES, JR.

FREDRICK R. HUNTER

6-27-78 CONCURRED IN

DATE CHARLES W. WESTERMAN, CITY CLERK

Memorandum

To H. P. Wehrenberg, Board of Works Date June 2, 1978

From D. G. Ruetschilling, Purchasing Department

Subject Fault Current and Co-ordination Study - WPC Plant

COPIES TO:

R. Pitzer

Enclosed herewith is Purchase Order #0060 to Westinghouse Electric Corporation, along with quotes, correspondence, and recommendations supporting purchase of the above subject study.

After you have had the opportunity to review this paperwork, please process accordingly, for presentation to Council.

Thank you,

David

David Ruetschilling
Asst. Director of Purchases

Memorandum

To Dave Ruetschilling Date June 2, 1978

From Ron Pitzer RP

Subject Purchase Order for Fault Study, WPC Plant

COPIES TO:

Quotes were solicited by the WPC Plant consulting engineer, H.P. Steeg and Associates, for the performance of an electrical system fault study. Three companies responded; General Electric, Westinghouse, and High Voltage Maintenance Corporation. Westinghouse submitted the best bid of $8,050.

The following documents are attached in support of the selection of Westinghouse:

1. Purchase requisition
2. Specifications sent to the bidders, including area map, floor plan (drawing E-3A), Spec E 77-17 pages 1 and 2, and drawings E-12A, E-34A, and E-35.
3. General Electric Supply Company quote, dated January 5, 1978.
4. High Voltage Maintenance Corporation quote, dated January 12, 1978.
5. Westinghouse Electric Corporation quote, dated January 30, 1978.
6. Westinghouse Electric Corporation letter of April 6, 1978 describing the work to be done in the fault study.
7. Steeg's letter of recommendation dated April 26, 1978.

I have also attached a set of bid specifications to be included with the purchase order to be sent to the City Council.

CITY OF FORT WAYNE
CITY UTILITIES

DEPARTMENT OF PURCHASES
CITY—COUNTY BUILDING
NUMBER ONE EAST MAIN STREET
FORT WAYNE, INDIANA 46802

ORIGINAL
PURCHASE ORDER NO. 0060
This number must appear on each package, packing slip, invoice, bill of lading, express receipt and correspondence.

DATE June 2, 1978

Westinghouse Electric Corporation
Box 1827
Indianapolis, Indiana 46206
Attn: Robert P. Schwihs - Sales Eng.

SHIP TO —

General Superintendent City Utilities
4th Floor City County Bldg.
One Main Street
Fort Wayne, Indiana 46802

MAIL ALL INVOICES TO —
CITY UTILITIES
GENERAL ACCOUNTING
4th FLOOR CITY—COUNTY BUILDING
NUMBER ONE EAST MAIN STREET
FORT WAYNE, INDIANA 46802

INVOICE IN DUPLICATE, INCLUDING CERTIFICATION AS REQUIRED BY INDIANA STATE BOARD OF ACCOUNTS

QUANTITY RECEIVED	QUANTITY ORDERED	DESCRIPTION	ACC'T. OR W.O. NO.	UNIT PRICE	TOTAL
		Furnish Fault Current Relay and Coordination Study per H. P. Steeg specifications E77-17 and Westinghouse Electric Corporation quote. Work to be complete within twenty-four (24) weeks after issuance of Purchase Order to Westinghouse. Fee of $8,050 to be paid upon Board of Works approval and acceptance of Westinghouse report. Westinghouse to furnish eight (8) copies of the engineering report and a computer printout with instructions for interpretation.			$ 8,050. 00

SUBJECT TO COUNCILMANIC APPROVAL

ATTENTION!
Send all Invoices to General Accounting
4th Floor, City-County Bldg.
1 E. Main St.
Fort Wayne, Indiana 46802
Show P. O. Number on Packing Slip and Invoice.

DR/pl #131

NOTE: TERMS OF PAYMENT MUST BE SHOWN ON FACE OF INVOICE. OTHERWISE A 2% CASH DISCOUNT WILL BE TAKEN.

BY _____
CITY UTILITIES PURCHASING AGENT

SUBJECT TO CONDITIONS ON REVERSE SIDE

FORM 11-46

FORM U-48

WESTINGHOUSE ELECTRIC CORP
Box 1823
Indianapolis, Indiana 462
Attn: Robert P. Schwilk
Sales Engineer

City Utilities

PURCHASE REQUISITION

Date 6/2/78

Please order the following Material for Delivery as Specified:

To be delivered to General Superintendent, City Utilities Req. No. 131

On or before P. O. No. 0060

QUANTITY	DESCRIPTION	DIST. NO.	DEPARTMENT ESTIMATED COST
	~~Current Relay and Coordination~~		
	Furnish Fault Study per H.P. Steg		
	specifications E-77-17 and Westinghouse		
	Electric Corporation quote. Work to		
	be complete within twenty-four (24) weeks		
	after issuance of P.O. to Westinghouse.		
	Fee of $8,050 to be paid upon Board		
	of Works approval and acceptance of		
	Westinghouse report. Westinghouse to		
	furnish eight copies of the engineer-		
	ing report and a computer printout		
	with instructions for interpretation.		8050
REMARKS:			
	Subject to Commission Approval		

I hereby certify that the work or supplies above specified are necessary for stock or use in this department.

Department General Superintendent

Dept. Head

Charge Light Water Sewage

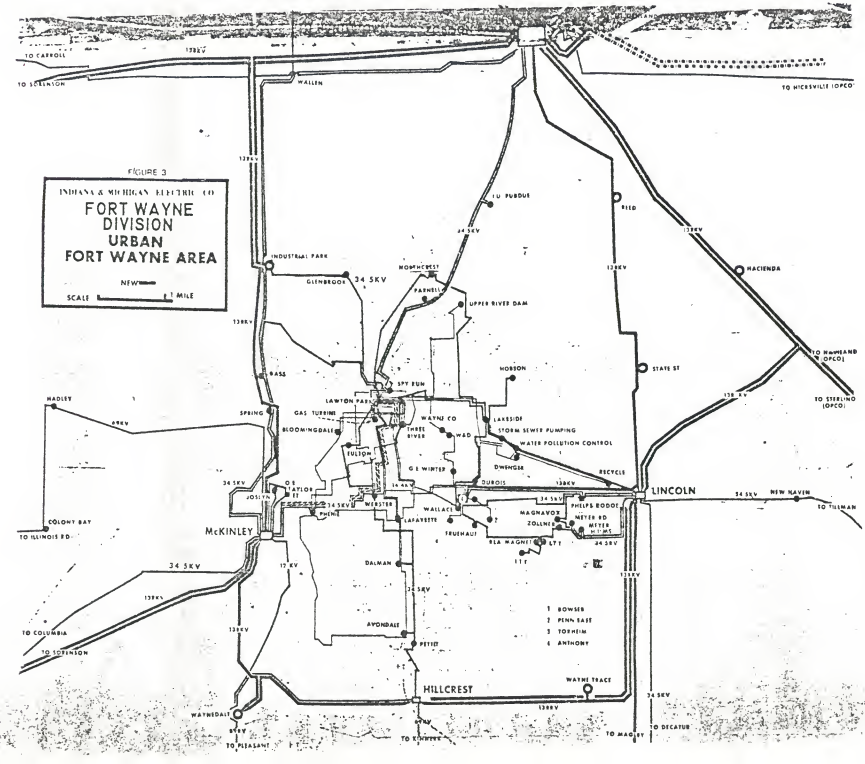
FIGURE 3
INDIANA & MICHIGAN ELECTRIC CO
FORT WAYNE
DIVISION
URBAN
FORT WAYNE AREA
NEW
SCALE
1 MILE
TO CARROLL
TO SORENSON
WALLEN
TO HICKSVILLE (OPCO)
INDUSTRIAL PARK
GLENBROOK
34.5KV
MORTHCREST
PARNELL
UPPER RIVER DAM
FU PURDUE
REED
HACIENDA
TO HAVELAND (OPCO)
STATE ST
TO STERLING (OPCO)
HOBSON
SPY RUN
LAWTON PARK
GAS TURBINE
BLOOMINGDALE
SPRING
HADLEY
WAYNE CO
THREE RIVER
WAD
LAKESIDE
STORM SEWER PUMPING
WATER POLLUTION CONTROL
FULTON
G E WINTER
DWENGER
RECYCLE
DUBOIS
LINCOLN
NEW HAVEN
TO TILLMAN
JOSLYN
O E TAYLOR ST
WEBSTER
PHENIX
WALLACE
LAFAYETTE
TRUEHAUT
MAGNAVOX
ZOLLNER
PHILLIPS RODOT
MEYER RD
MEYER MTMS
REA MAGNET
McKINLEY
COLONY BAY
TO ILLINOIS RD
DALMAN
AVONDALE
PETTIT
TO COLUMBIA
TO SORENSON
HILLCREST
WAYNE TRACE
WAYNEDALE
TO PLEASANT
TO KINNEY
TO MADLEY
TO DECATUR
1 BOWSER
2 PENN EAST
3 TORHEIM
4 ANTHONY

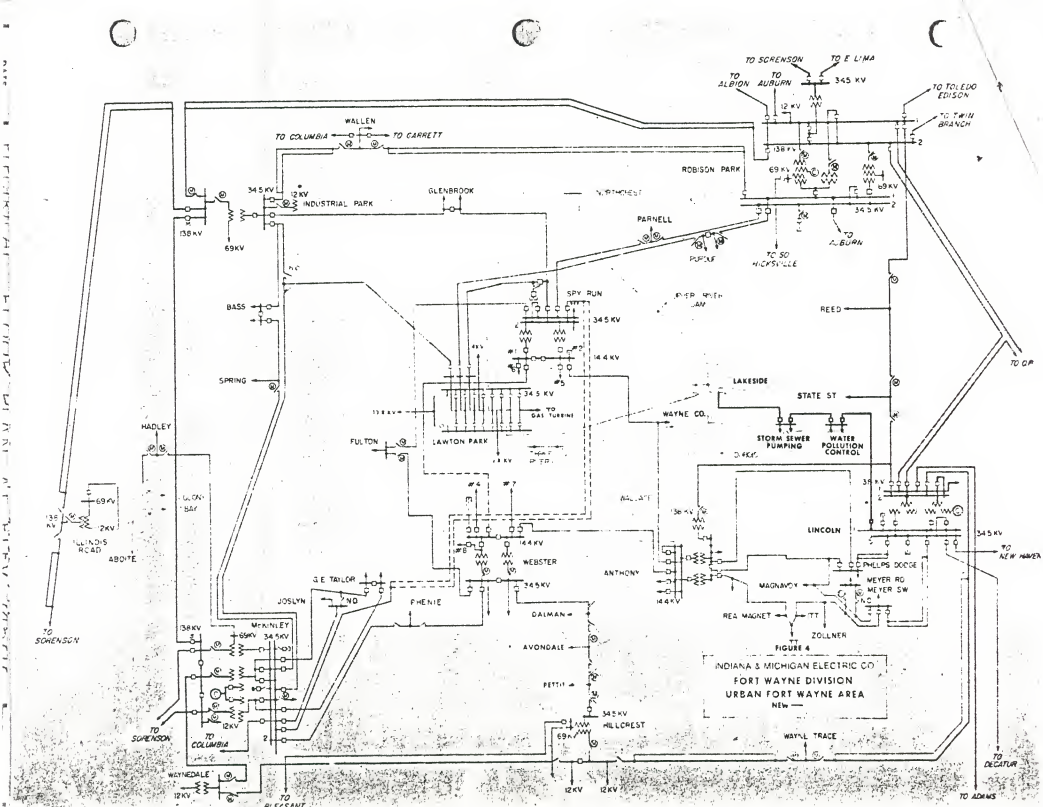

FIGURE 4

INDIANA & MICHIGAN ELECTRIC CO.
FORT WAYNE DIVISION
URBAN FORT WAYNE AREA
NEW

ELECTRICAL REVIEW NOTES
SHORT CIRCUIT AND PROTECTIVE DEVICE COORDINATION STUDIES

1. Because of the complexity of the distribution system for the expanded electrical systems at the Wastewater Treatment Plant and the Storm Water Plant, it is imperative that an engineering study be made by the General Electric Company. The required studies to be made are (1) Short Circuit Studies and (2) Protective Device Coordination Studies.

2. The Short Circuit Study of the power systems shall be as follows.

   A. A short-circuit current study shall be performed and documented in a bound report form with all short-circuit current calculations made in accordance with the latest standards adopted by the American National Standards Institute. The following short-circuit calculating standards shall be used where appropriate in the study:

      ANSI-C37.010-1964 - Standard Application Guide for AC High-voltage Circuit Breakers.

      ANSI-C37.5-1969 - Calculation of Fault Currents for Application of Power Circuit Breakers Rated on a Total Current Basis.

      ANSI-C37.13-1963 - Low-voltage AC Power Circuit Breakers (600-volt Insulation Class).

   B. The short-circuit calculations shall be accompanied by a bus-to-bus listing of all the system impedances calculated on a common 10 MVA bus. A complete one-line diagram shall be furnished that will identify the bus locations in the system. The base MVA used for calculating all impedances shall be included in the report. The short-circuit calculations shall be made with the aid of a digital computer. The computer printout for each study condition shall accompany the report with a written explanation of how to interpret the printout sheets. The one-line impedance diagram shall be indexed to the computer printout for complete interpretation of short-circuit duties. Calculations shall include all buses specifically identified for study on the one-line diagram.

3. The protective device coordination study of the power systems shall be as follows.

   A. A complete protective device coordination study of the power system shall be performed and documented in a bound report form to prescribe settings for defined adjustable protective devices. The prescribed settings shall be determined based on a practical compromise between protection of electrical equipment and coordination between devices for downstream faults. The criteria for protection shall be in accordance with the latest requirements that are set forth by the National Electrical Code (NEC) and the American National Standards Institute (ANSI).

STORM WATER

DATE 5/31/77 ELECTRICAL FLOOR PLAN AT ELEV. 745.07 SCALE 1/4" = 1'-0"

B. The study report shall include a complete one-line diagram that represents the parts of the system with the protective devices being studied. The diagram shall identify the devices involved in the study, all current and potential transformer ratios, and protective relaying functionally identified by ANSI device numbers.

C. The tabulation of recommended relay settings shall be identified by location, device number, adjustable range, and proposed settings.

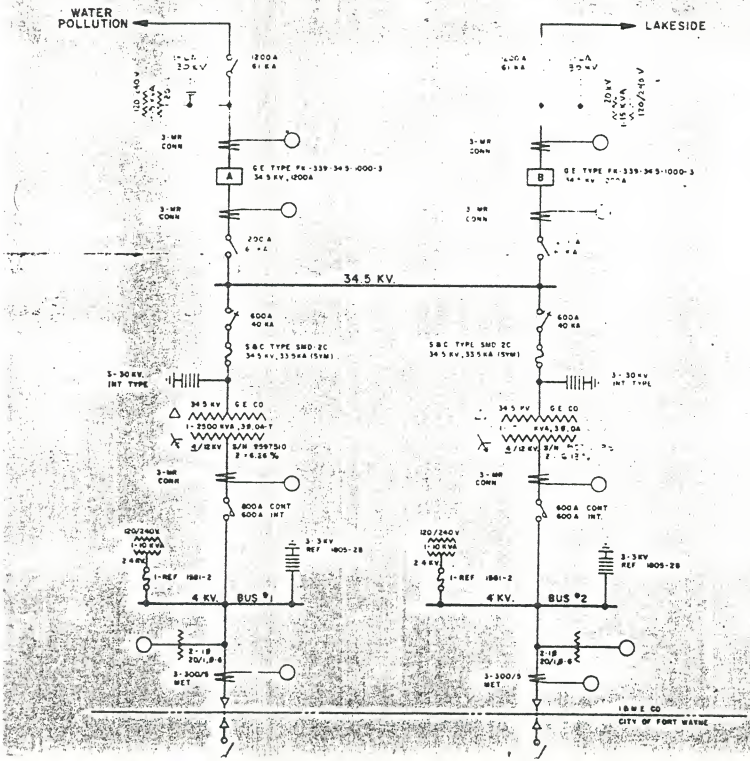

STORM PUMP STATION

DATE	NO	DESCRIPTION
		REVISIONS

ONE LINE DIAGRAM

DATE
5/31/77

SCALE
1/4"=1'-0"

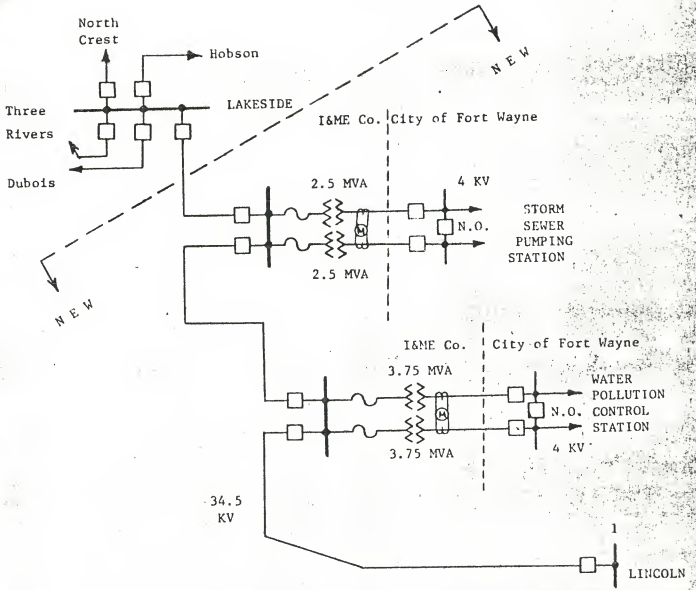

FIGURE 5

SERVICE TO
STORM SEWER PUMPING AND
WATER POLLUTION CONTROL
CITY OF FORT WAYNE

DATE 5/31/77

ELECTRICAL FLOOR PLAN AT ELEV. 745.07

SCALE 1/4" = 1'-0"

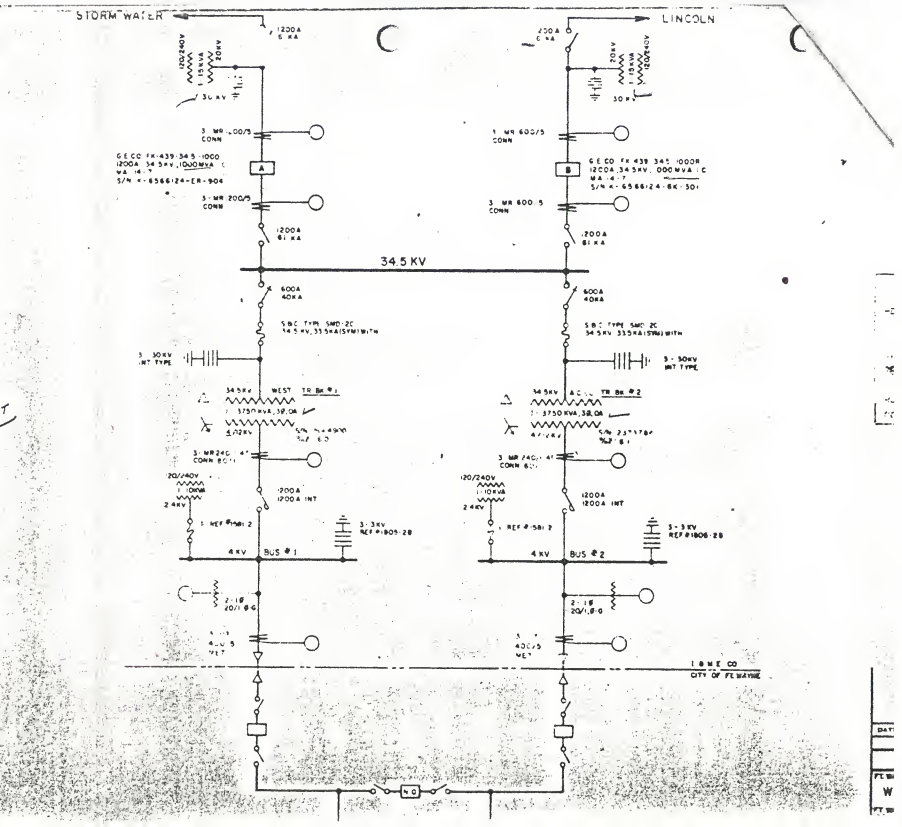

5/31/77

ELECTRICAL FLOOR PLAN AT ELEV. 743.0'

W.P.C. PLANT

MAIN PLANT

SCALE 1/4"=1'-0"

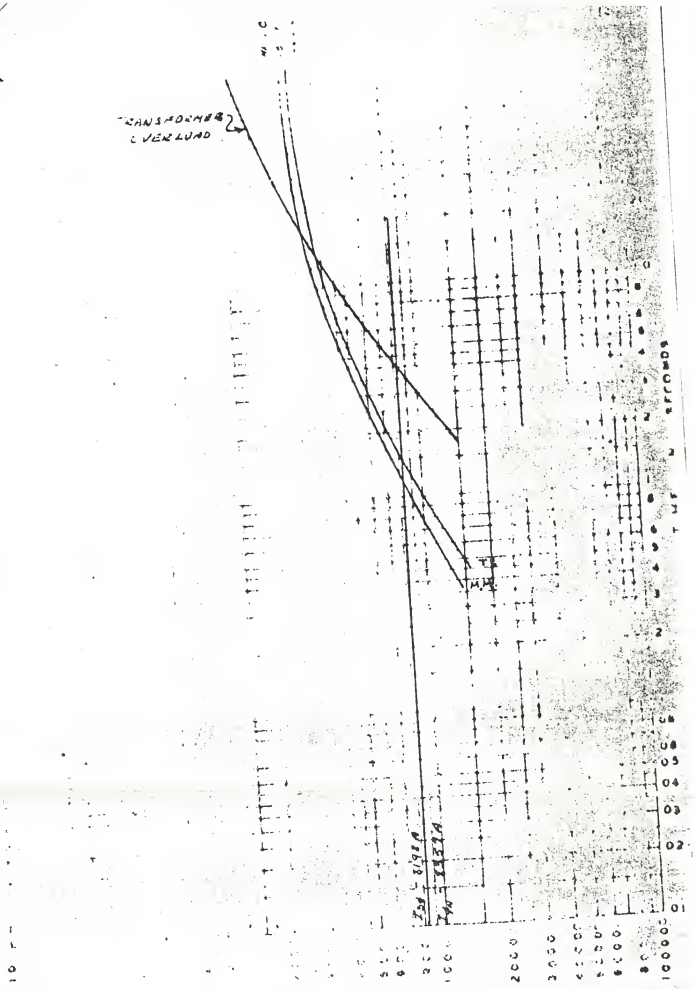
TRANSFORMER OVERLOAD
SECONDS
TIME
4 KV
IMPEDE
34.5/4KV
WATER POLLUTION STATION
ELECTRICAL FLOOR PLAN A1
"ELEV." 745.07
SCALE
1/4" = 1'-0"
DATE

General Electric Supply COMPANY

A DIVISION OF GENERAL ELECTRIC COMPANY

RECEIVED JAN - 6 1978

STEEG HENRY B-DIVISION HOWARD NEEDLES TAMMEN & BERGENDOFF
HENRY B. Steeg & Associates Division

QUOTATION NO. IP77-10035 R-1

DATE 1/5/78

Unless otherwise stated, this quotation expires 30 days from its date, may be modified or withdrawn by General Electric Supply Company (GESCO) prior to any acceptance and supersedes all previous quotations and agreements relating to this transaction. All communications should refer to the quotation number and be addressed to our office at:

Mr. Bob Clauson
Steeg Henry B-Division Howard
Needles Tammen Bergendoff
3333 Founders Lane
Indianapolis, Indiana 46268

SUBJECT:
Power System Study for the
WWTP Fort Wayne

Gentlemen:

We are very pleased to quote the following in response to your request for a proposal and quotation of a power system study for the Wastewater Treatment Facility in Fort Wayne, Indiana.

Total Lot Net price for this system study is $20500.00

This quoted price is based on completing the studies described in the Specifications by Mr. R. L. Clauson dated October 31, 1977. The study will also include the existing system. All field data will be collected by General Electric Industrial Power Systems Engineer. This quote includes two trips by the General Electric assigned Engineer to the site.

The quoted price is based on completing the scope of work in report form. The price quoted is firm for sixty (60) days. Terms and conditions of sale of this service will be as outlined in the attached Handbook Sheet 1651, Pages 15-16.

If you should have any questions or need further assistance, please contact me.

Regards,

E. N. SIMONS
Sales Manager

ENS:ce

cc: W. Walsh
Enc.

SALE OF ANY GOODS COVERED BY THIS QUOTATION IS EXPRESSLY CONDITIONED UPON THE TERMS AND CONDITIONS CONTAINED OR REFERRED TO HEREIN, INCLUDING THOSE SET FORTH ON THE BACK OF THIS LETTER AND THOSE CONTAINED IN ANY ATTACHMENTS HERETO.

Commercial Rate Schedule

For Specialized Engineering Studies of Industrial and Commercial Electric Power Systems

AVAILABLE SERVICES

The General Electric Company through the Industrial Power Systems Engineering Operation of the Contractors Equipment Business Division makes available to customers the capabilities of its systems and analytical engineering staff for selected, computer-based, specialized engineering studies of industrial and commercial, electric power systems. This engineering staff consists of an organization of well-qualified people with highly specialized training and experience in the design, application, and analysis of complex power systems in industry today. Improved computer technology complements the talents of the engineering staff by offering unusual capabilities in speed of computations as well as the increased complexity of analysis.

This engineering staff has an intimate knowledge of the industrial electrical power apparatus that is applied to a wide variety of industrial and commercial power systems. Typical specialized engineering studies that can be beneficial to the design and operation of an industrial plant include studies of short-circuit capability, protective-device coordination, load flow and stability, motor starting, voltage dip and flicker, transient overvoltage, impact loading, harmonic analysis, economic and conceptual design. Other engineering studies can be undertaken after a preliminary investigation has proven their feasibility.

This study capability is offered primarily to customers who intend to purchase electrical apparatus coincident with the specialized study or as a result of the study.

The price for this specialized engineering service is not included in the published prices for General Electric apparatus, but, upon request, may be included in the over-all price for the equipment portion of a project. Also, the price may be quoted as a separate item, as a lot net job basis, or on a daily fee basis.

PER DIEM FEE SCHEDULE

*Manager or Consulting Application Engineer	*$500/day
Application Engineer	*$370/day
Technical Assistant, Engineering Assistant, or Programmer	*$220/day

For work done in the field the above per diem rates are applicable to a normal work day or any part thereof, including travel time. For work done at Schenectady the actual hours worked will be totaled and divided by eight to establish the applicable number of days and fractions of days at the above rates.

The above rates do not include travel and living expenses which will be billed at cost. All other expense items will also be billed at cost such as computer, drafting, reproduction and mailing charges.

For overtime or Saturday work the above per diem rates will be increased to 1½ times the listed rates. For work during Sundays and holidays observed in Schenectady the above per diem rates will be doubled.

Billing will be rendered monthly.

QUALIFICATIONS

*Manager or Consulting Application Engineer

Through the formal pursuit of engineering studies and through the accumulation of experiences on practical engineering assignments, this highly accomplished class of engineers is qualified to analyze conditions and to recommend solutions that require an exceptional degree of knowledge, perception, ingenuity, resourcefulness and good judgment to achieve the desired results.

Application Engineer

The application engineer has developed a keen knowledge of industrial and commercial electric power systems including the specialized electrical power apparatus that is associated with unusual projects or manufacturing processes. Valuable years of experience coupled with the accessibility to more experienced consultants qualify the application engineer to direct almost any specialized industrial or commercial power system engineering study. Modern machinery assistance in the form of digital computers and established programs, analog computers and other equipment, improves the efficiency and effectiveness of the application engineer.

Technical Assistant, Engineering Assistant, or Programmer

These personnel have had mathematics or some formal engineering education and are qualified in data processing and computer use. With experienced engineering supervision, these personnel are qualified to work on technical problems and to handle the data and data processing involved in specialized engineering studies.

TERMS AND CONDITIONS OF SALE

Study Conditions

Specialized engineering studies of industrial and commercial power systems can be extremely useful and valuable aids in planning for efficiency, reliability, flexibility, economy, safety or a desired combination of these characteristics. However, in most cases only a limited number of many possible alternate layouts can be investigated, and practically all such studies require the making of some assumptions and the exercise of judgment. These include the optimum balance between competing objectives, such as protection of equipment as against continuity of service, or reliability as against economy. In addition, operating results are affected by the accuracy of information available, by basic design, by the quality and capability limitations of the equipment, and by such factors as maintenance, loading and mode of operation.

Warranty

The Company warrants that it will exercise professional competence in the performance of the services to be provided by it under this contract. It will correct any portion of the study which does not meet this standard, if notified in writing within one year after completion of the study. The foregoing shall constitute the sole responsibility of the Company and the sole remedy of the Purchaser.

Time

The time schedule for the study is approximate, unless otherwise specifically stated, and in any event is based upon prompt receipt of all necessary information. In the event of delay by either party for any cause beyond its reasonable control, the scheduled time will be extended by a period equal to the period of the delay.

Fee

The stated fee covers only services listed in the proposal. Additional services found necessary or desirable by the Pur-

Commercial Rate Schedule

For Specialized Engineering Studies of Industrial and Commercial Electric Power Systems

AVAILABLE SERVICES

The General Electric Company through the Industrial Power Systems Engineering Operation of the Contractors Equipment Business Division makes available to customers the capabilities of its systems and analytical engineering staff for selected, computer-based, specialized engineering studies of industrial and commercial, electric power systems. This engineering staff consists of an organization of well-qualified people with highly specialized training and experience in the design, application, and analysis of complex power systems in industry today. Improved computer technology complements the talents of the engineering staff by offering unusual capabilities in speed of computations as well as the increased complexity of analysis.

This engineering staff has an intimate knowledge of the industrial electrical power apparatus that is applied to a wide variety of industrial and commercial power systems. Typical specialized engineering studies that can be beneficial to the design and operation of an industrial plant include studies of short-circuit capability, protective-device coordination, load flow and stability, motor starting, voltage dip and flicker, transient overvoltage, impact loading, harmonic analysis, economic and conceptual design. Other engineering studies can be undertaken after a preliminary investigation has proven their feasibility.

This study capability is offered primarily to customers who intend to purchase electrical apparatus coincident with the specialized study or as a result of the study.

The price for this specialized engineering service is not included in the published prices for General Electric apparatus, but, upon request, may be included in the over-all price for the equipment portion of a project. Also, the price may be quoted as a separate item, as a lot net job basis, or on a daily fee basis.

PER DIEM FEE SCHEDULE

*Manager or Consulting Application Engineer	*$500/day
Application Engineer	*$370/day
Technical Assistant, Engineering Assistant, or Programmer	*$220/day

For work done in the field the above per diem rates are applicable to a normal work day or any part thereof, including travel time. For work done at Schenectady the actual hours worked will be totaled and divided by eight to establish the applicable number of days and fractions of days at the above rates.

The above rates do not include travel and living expenses which will be billed at cost. All other expense items will also be billed at cost such as computer, drafting, reproduction and mailing charges.

For overtime or Saturday work the above per diem rates will be increased to 1½ times the listed rates. For work during Sundays and holidays observed in Schenectady the above per diem rates will be doubled.

Billing will be rendered monthly.

QUALIFICATIONS

*Manager or Consulting Application Engineer

Through the formal pursuit of engineering studies and through the accumulation of experiences on practical engineering assignments, this highly accomplished class of engineers is qualified to analyze conditions and to recommend solutions that require an exceptional degree of knowledge, perception, ingenuity, resourcefulness and good judgment to achieve the desired results.

Application Engineer

The application engineer has developed a keen knowledge of industrial and commercial electric power systems including the specialized electrical power apparatus that is associated with unusual projects or manufacturing processes. Valuable years of experience coupled with the accessibility to more experienced consultants qualify the application engineer to direct almost any specialized industrial or commercial power system engineering study. Modern machinery assistance in the form of digital computers and established programs, analog computers and other equipment, improves the efficiency and effectiveness of the application engineer.

Technical Assistant, Engineering Assistant, or Programmer

These personnel have had mathematics or some formal engineering education and are qualified in data processing and computer use. With experienced engineering supervision, these personnel are qualified to work on technical problems and to handle the data and data processing involved in specialized engineering studies.

TERMS AND CONDITIONS OF SALE

Study Conditions

Specialized engineering studies of industrial and commercial power systems can be extremely useful and valuable aids in planning for efficiency, reliability, flexibility, economy, safety or a desired combination of these characteristics. However, in most cases only a limited number of many possible alternate layouts can be investigated, and practically all such studies require the making of some assumptions and the exercise of judgment. These include the optimum balance between competing objectives, such as protection of equipment as against continuity of service, or reliability as against economy. In addition, operating results are affected by the accuracy of information available, by basic design, by the quality and capability limitations of the equipment, and by such factors as maintenance, loading and mode of operation.

Warranty

The Company warrants that it will exercise professional competence in the performance of the services to be provided by it under this contract. It will correct any portion of the study which does not meet this standard, if notified in writing within one year after completion of the study. The foregoing shall constitute the sole responsibility of the Company and the sole remedy of the Purchaser.

Time

The time schedule for the study is approximate, unless otherwise specifically stated, and in any event is based upon prompt receipt of all necessary information. In the event of delay by either party for any cause beyond its reasonable control, the scheduled time will be extended by a period equal to the period of the delay.

Fee

The stated fee covers only services listed in the proposal. Additional services found necessary or desirable by the Pur-

ommercial Rate Sched le

For Specialized Engineering Studies of Industrial and Commercial Electric Power Systems

aser will involve additional fees, which ill be given upon request. The standard rms of payment for studies sold on a t net job basis are cash in full within 0 days after delivery of the study.

ancellation

The Purchaser may cancel his order nly upon written notice and upon ayment to the Company of reasonable nd proper cancellation charges.

olents

The Company makes no representa- on and assumes no responsibility in spect to any patents that may be in- olved in the apparatus, and assumes o responsibility for the defense, settle- ent, or payment of any claims that the ystem or any part or parts of it infringe ny patent.

imitation of Liability

The Company does not assume re- ponsibility for the accuracy or the pecific operating results of any engi- eering study, nor for the achieving of best possible compromise between ting objectives, nor for achieving sired objective in every case. Nor es it assume responsibility or liability any damage to property, injury to or ath of personnel, or any other loss at may result directly or indirectly om failure of the system or any part parts of it to operate in accordance ith the objectives or predictions of the udy. In no event shall the Company liable for special or consequential mages.

ORDERING INSTRUCTIONS

Requisitions covering power system study services described herein should:

1. Be placed on "Industrial Power Systems Engineering Operation, Building 6, Schenectady Works."
2. Indicate billing as follows:
   - ☐ Monthly billing on a time and expense basis as indicated under "Fee Schedule."

   OR for studies purchased on a lot net price basis:
   - ☐ Lot net upon completion.
   - ☐ Progressive payments by quarters up to 75 percent, remainder on completion. (Preferred for studies where price is over $10,000 or study shipment exceeds one year.)
3. Give appropriate billing instructions:
   Bill customer
   Bill IntSD
   Bill _____(other)
4. State the following disclaimer clause which must be made part of the acknowledgment to the customer.

   "The only responsibility assumed by the Company is to exercise professional competence in the performance of the studies agreed upon. The Company will correct any portion of the studies which does not meet this standard, but assumes no other responsibility or liability of any kind in connection with the studies."
5. Order:

   1—Power system study (or studies) in accordance with customer specifications (where applicable) and Industrial Power Systems Engineering Operation file TSO_____*. Price $_____*

* Obtain from Industrial Power Systems Engineering Operation quotation.

6. Be marked for copies as follows:

   R. B. Moore, (1) copy, IPSEO, Bldg. 6-3, Schenectady

   G. J. Potochney, (1) copy, IPSEO, Bldg. 6-3, Schenectady (electric systems only)

   B. M. Turner, (1) copy, IPSEO, Bldg. 6-3, Schenectady

   G. W. Walsh, (1) copy, IPSEO, Bldg. 6-3, Schenectady

Note: Do not order product department prints for any of the above persons. On receipt of requisition, a letter will be sent to Order Service and interested Sales personnel advising the name and address of the project engineer assigned. Prints, data, correspondence, and questions should then be directed to the project engineer.

FURTHER INFORMATION

For further information, proposals, or questions concerning issue of requisition, please contact:

B. M. Turner, IPSEO Sales, Bldg. 6, Schenectady, Dial Comm 8*235-4664

Westinghouse
Electric Corporation

Box 1827
Indianapolis Indiana 46206

April 6, 1978

Howard Needles Tammen & Bergendoff
Henry D. Steeg & Associates Division
3333 Founders Lane
Indianapolis, Indiana 46268

Attention: Mr. Ray Kocher

Subject: Water Quality Control Project
Fort Wayne, Indiana

Gentlemen:

This letter confirms our meeting of April 4, 1978 regarding the coordination study for the subject job.

Westinghouse engineers in Greentree, Pa. will perform the study with data furnished by others. Before using any computer time, Westinghouse will submit this data for verification on a one-line diagram.

Included in our quotation is a computer print-out, instructions for interpretation of same, recommended relay and associated device settings, and an engineer's summary report all per the specifications supplied to us in Mr. Clauson's January 6, 1978 letter.

Westinghouse lot price $8050.00 net all.

Thank you again for considering Westinghouse. We understand that this project will begin between 30 and 120 days. If we can be of any further assistance or if you have any questions, please do not hesitate to call us at 317/266-1679.

Sincerely,

Robert P. Schweihs

Robert P. Schweihs
Sales Engineer

cc: Howard Needles Tammen & Bergendoff
Bob Clauson

APR 17

Westinghouse
Electric Corporation

Box 1827
Indianapolis Indiana 46206

(317) 266-1679

January 30, 1978

Howard, Needles, Tammen & Bergendoff
3333 Founders Lane
Indianapolis, Indiana 46268

Attention: Mr. Robert L. Clauson

Subject: Waste Water Treatment Plant
Fort Wayne, Indiana

Dear Sir:

The coordination study for subject job has been evaluated per your request. Our quotation is per the materials presented to us including area map, floor plan, Spec pages E77-17 pages 1 and 2, and drawings E12A, E34A and E35.

Included in our quotation is a computer printout with instructions for interpretation as well as an engineering report that summarizes the study.

Westinghouse Lot Price: $8050.00 net all

It is understood that this is a budgetary figure and that it will be renegotiated prior to order entry.

Thank you for considering Westinghouse. If you have any questions regarding our quotation, please contact us at 317-266-1679.

Sincerely,

Robert P. Schweihs

Robert P. Schweihs
Sales Engineer

RPS/nc

Subject to the Terms and Conditions on the Back of this Quotation

HIGH VOLTAGE MAINTENANCE CORP.
CLEVELAND • DAYTON • INDIANAPOLIS

P.O. BOX 19292
1416 SADLIER CIRCLE
INDIANAPOLIS, INDIANA 46219
PHONE (317) 356-6411

January 12, 1978

Howard Needles Tammen & Bergendoff
Henry B. Steeg & Associates Division
3333 Founders Lane
Indianapolis, Indiana 46268

Attention: Mr. Robert L. Clauson

Quote E-1646

SUBJECT: Fault Current and Protective Device
Coordination Study - Water Polution
Control Plant, Stormwater Lift Station
Fort Wayne, Indiana.

Dear Mr. Clauson:

In accordance with discussion during our meeting on January 10 and your letter of January 6, High Voltage Maintenance Corporation proposes to perform engineering and furnish a Fault Current and Protective Device Coordination Study for a price of $8,400.00.

This study will be in accordance with Specification E77-1 except computer printout will not be provided. Since this is primarily a radial, rather than a complex network system, we feel that the additional cost for a computer printout cannot be justified.

Bound copies of the report will be furnished, certified by an Indiana registered profession engineer, with recommendations and complete documentation including calculations, equipment characteristic curves, etc.

It is understood that we will be furnished all field data necessary; however, it may be desirable for our representative to visit the field installation. No protective device testing and calibration is included. We would be glad to quote on this, if needed.

If you have any questions, or desire clarification, please do not hestitate to contact us.

Yours very truly,

Glen T. Lautenschlager, P.E.
Manager, Indiana Division

GTL:asw

HOWARD NEEDLES TAMMEN & BERGENDOFF

Henry B. Steeg & Associates Division

April 26, 1978

Board of Public Works
City County Building
One Main Street
Fort Wayne, Indiana 46802

Attention: Mr. Henry Wehrenberg, Chairman

Re: Fault Current and Coordination Study
Water Quality Control Project
Fort Wayne, Indiana

Gentlemen and Mrs. Ethel LaMar:

As you recall during your Board meeting on April 5, 1978, the above matter was discussed. We advised that three quoted costs were received from Westinghouse Electric Corporation, High Voltage Maintenance Corporation, and General Electric Company and that we were awaiting confirmation from the firm offering to do the study at the lowest cost. The following is a tabulation of quotes received. (Copies of each attached):

1. Westinghouse Electric Corporation $ 8,050.00
2. High Voltage Maintenance Corporation $ 8,400.00
3. General Electric Company $20,500.00

After review of the above quotes, the representative of Westinghouse was contacted to verify quote and confirm that the quote is currently valid. A copy of the Westinghouse Electric Corp. response letter dated April 6, 1978 is attached.

Based upon our review and the aforementioned confirmation, it is recommended that the City of Fort Wayne accept the Westinghouse proposal for the "Fault Current and Coordination Study" for the amount of $8,050.00.

There are a few options available to the city regarding funding of the study. These are:

1. Through direct negotiations, contract with Westinghouse using City funds now and file with the State of Indiana and U.S. Environmental Protection Agency for reimbursement if eligible.
2. Process a grant amendment and await approval of all parties before contract with Westinghouse.

Architects Engineers Planners

3333 Founders Lane, Indianapolis, Indiana 46268, 317 299-3160

Partners: H.C. Lamberton, Jr. PE, James F. Finn PE, Paul L. Heineman PE, Joseph H. Looper PE, Gerard F. Fox PE, William M. Wachter PE, George K. Erganian PE, Broadhead Low PE, Charles T. Hennigan PE, Edgar R. Johnson PE, Daniel J. Watkins PE, Ralph E. Myers FAIA, Daniel J. Spigai PE, John L. Colton PE, Francis X. Hall PE, Associates Daniel J. Appel PE, William C. Meredith PE, Robert W. Richards PE, Robert S. Coma PE, Don R. Ort PE, Donald A. Duples PE, Frederick H. Sterbenz PE, James Graham PE, Robert B. Kollmar PE, Kendall T. Lincoln CPA, Jack P. Shedd PE, Roberts W. Smithem PE, Jack C. Thompson PE, Richard D. Beckman PE, Don A. Eggen, Jr., AIA, William Love, AIA

Offices: Alexandria, VA, Atlanta, Baltimore, Baton Rouge, Boston, Buffalo, Cape Coral, FL, Casper, WY, Charleston, WV, Chicago, Cleveland, Dallas, Denver, Fairfield, NJ, Indianapolis, Jacksonville, FL, Kansas City, Los Angeles, Miami, Milwaukee, Minneapolis, Newark, DE, New York, Orlando, Overland Park, KS, Richmond, Seattle, Tulsa, Frankfurt, Manila, Rio de Janeiro, Tehran

FILES

3. Wait for consideration as part of AWT project
4. Not accept any of quotes and not do study .

Since the results of the study are critical to the logical and orderly progress of construction, option No. 1 above is the considered best. The other options have built in costly delays or no action which could create plant operation and maintenance problems and down time when and if faults occur.

We await your direction regarding this matter offering our assistance where desired. Please call us if questions arise.

Very truly yours,

HOWARD NEEDLES TAMMEN & BERGENDOFF
HENRY B. STEEG AND ASSOICATES DIVISION

Ray H. Kocher

Ray H. Kocher, P.E.

RHK/gb

Enclosure

cc: Ed Stanczak
Ron Pitzer
Paul Brunner
Neil Wisler

City Clerk Memorandum

CHARLES W. WESTERMAN, Clerk

To Mayor Robert E. Armstrong Date 6-22-78

From Charles W. Westerman - City Clerk

Subject Appearance before Common Council 6-27-78

COPIES TO:

BILL NO. S-78-06-20

AN ORDINANCE approving City Utilities Purchase Order No. 0060 with Westinghouse Electric Corporation for a Coordination Study for General Superintendent of City Utilities

Pursuant to the request of the Standing Committee Chairman of City Utilities of the Common Council, the presence of a member of the Board of Public Works or someone familiar with the above ordinance is respectfully requested on June 27, 1978, 7:00 P.M., Room 128, Common Council Conference Room.

Common Council would like more information regarding the hiring of Westinghouse Electric Corporation, for a Coordination Study to analyze the electrical system of the WPC Plant.

Your cooperation will be greatly appreciated.

read.
6/22/78
WCR

4098

TITLE OF ORDINANCE SPECIAL ORDINANCE - CITY UTILITIES PURCHASE ORDER NO. 0060, WESTINGHOUSE ELEC. CORP.

DEPARTMENT REQUESTING ORDINANCE BOARD OF PUBLIC WORKS 8-78-06-20

SYNOPSIS OF ORDINANCE CITY UTILITIES PURCHASE ORDER NO. 0060, WESTINGHOUSE ELECTRIC CORPORATION, FOR FAULT CURRENT RELAY AND COORDINATION STUDY. THIS STUDY IS TO ANALYZE THE ELECTRICAL SYSTEM TO MAKE SURE THE RELAYS ARE ALL SET PROPERLY IN ORDER TO ALLOW THE PLANT TO RUN EFFICIENTLY. DESIGNATED STUDY TO BE DONE ON WPC PLANT.

(MEMORANDUM AND PURCHASE ORDER ATTACHED)

EFFECT OF PASSAGE ALLOW FOR OPERATION OF WPC PLANT

EFFECT OF NON-PASSAGE CONTINUED INEFFICIENCY DUE TO IMPROPER RELAY SETTING

MONEY INVOLVED (DIRECT COSTS, EXPENDITURES, SAVINGS) $8050.00 FROM CITY UTILITIES

ASSIGNED TO COMMITTEE

EP